YANMAR

ViO27-6

MINI-EXCAVATOR

	ViO27-6	ViO27LW-6
Operating weight	2 665 kg (Canopy) / 2 770 kg (Cabin)	2 560 kg (Canopy) / 2 665 kg (Cabin)
Engine	3TNV76-NBVA1	
Digging force (arm)	14.4 / 12.7 kN (long arm)	
Digging force (bucket)	23.1 kN	

RELIABILITY AND ROBUSTNESS IN A COMPACT PACKAGE

COMPACTNESS

Yanmar, inventor of the ViO concept, has an unmatched experience in developing Zero Tail Swing excavators. The ViO27-6 is a true Zero Tail Swing mini-excavator that allows a full rotation of the upper frame within the width of the crawlers for maximum safety.

NEW GENERATION YANMAR ENGINE

Latest generation of Yanmar TNV engines: electronically-controlled 3-cylinder engine with direct injection to improve performance, fuel consumption and emission levels.

BEST COMPONENTS

Developed in Japan with renowned components for top quality. Design and performance of the components made for long service life.

VIPPS HYDRAULIC SYSTEM

The ViO27-6 is equipped with a ViPPS hydraulic system which cumulates the flow of separate pumps in order to obtain the optimal combination in terms of speed, power, smoothness and balance, to allow smooth and simultaneous performance of all the operations, even while traveling.

EASE OF MAINTENANCE

5 hoods or openings which allow easy access for components maintenance. Fast and easy daily checks or servicing.

CABIN

Upgraded operator station: increased leg room, universal design, new electronic instrumentation, improved ergonomics and significantly improved noise level.

EASY OPERATION

Control levers ideally located for exceptional movement precision. An “auto-deceleration” feature is available in standard.

HIGH PERFORMANCE

Upgrading of the powerline components (engine, hydraulic pump, control valve): no compromise between power and compactness.

SIMPLE TRANSPORT

The ViO27-6 can easily be transported on a trailer. With a lighter standard counterweight, the ViO27LW-6 offers even more flexibility in terms of machine transportation together with work attachments.

UNMATCHED COMPACTNESS

The ViO27-6 is providing Yanmar customers with true peace of mind, especially in urban environment where space is limited.

YANMAR TRUE ZTS

ADVANTAGES OF THE ViO DESIGN

Neither the counterweight, nor the front part of the upper frame extend beyond the track width. With its front part designed not to hang over, the ViO27-6 has a very small turning radius.

- Improved safety for both the operator and the side workers: critical on the jobsites.
- Rear blind spot reduced to a minimum: Further enhances safety for the workers around the machine.

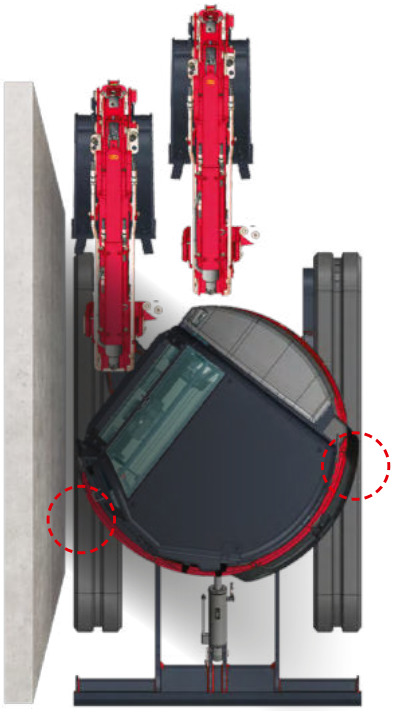

NO COMPROMISE ON PERFORMANCE

The ViO27-6 offers exceptional performance for a machine in its class. Its digging depth of 2940 mm* digging forces of 23.1kN (bucket) and 14.4 kN (arm), allow it to work quickly and efficiently, even under the most severe conditions.

STABILITY

The 1500 mm width of its undercarriage, the use of a large counterweight and excellent weight distribution, offer same or even greater stability than conventional machines of equivalent weight, as well as great lifting capacities.

EASY TRANSPORTATION

The transportation weight is only 2695 kg (2590 kg for ViO27lw-6) with cabin and its very compact undercarriage enables the ViO27-6 to be transported with its accessories.

LIGHT WEIGHT VERSION

As an alternative for optimized machine transportation, we have developped the ViO27LW-6 that comes with a modified lighter standard counterweight, bringing the transport weight to 2485 / 2590 kg respectively in canopy and cabin configuration.

The ViO27LW-6 benefits from same powertrain, hydraulic performances and standard/optional features as ViO27-6.

More transportation flexibility with similar outstanding performances and adaptability to your applications.

* With long arm.

COMFORT

SPACIOUS AND COMFORTABLE CABIN

Putting the operator at the center of its design initiatives, Yanmar developed the "Universal Design" concept which gives you comfort for enhanced productivity. Combined to an increased leg room, it enables to improve the comfort and safety of the operator. Operating controls and switches are ergonomically arranged for easy reach.

Flat and spacious leg room 385 mm

ALL-AROUND VISIBILITY

The ViO27-6 design provides an ergonomic environment, excellent visibility and exceptional safety. The shape of the cabin provides the operator with an optimal 360° visibility in order to improve the safety on the jobsite and to make work more efficient. The ViO27-6 is equipped with two mirrors to help the operator control the work area without moving from his seat.

COMFORTABLE SEAT

The ViO27-6 is equipped as standard with a comfortable and ergonomic suspension seat with adjustable controls, high backrest and retractable seat belt, to increase operator comfort and reduce body tension and fatigue.

PERFORMANCES

NEW GENERATION ELECTRONICALLY CONTROLLED YANMAR ENGINE

With an output of 15.8 kW at 2500 rpm, Yanmar's 3TNV76-NBVA1 engine is the result of our continuous efforts to achieve technological progress in fuel consumption and emissions. An improved fuel injection system reduces emissions and noise.

+ In standard, the auto-deceleration system further reduces fuel consumption.

VIPPS HYDRAULIC CIRCUIT (VIO PROGRESSIVE 3 PUMP SYSTEM)

The Vi027-6 uses a ViPPS hydraulic system. This configuration uses 1 double, variable displacement, piston pump and 2 gear pumps. The 3 main pumps totalize a maximum flow of 81,3 l/min, available for main machine operating movements. The flows of these pumps are cumulated in the Main Control Valves, according to the ViPPS system, to obtain the optimal combination in terms of speed, power, smoothness and balance.
The ViPPS system allows smooth and simultaneous performance of all operations, even while traveling, in order to have the ultimate working tool.

EASY OPERATION

PROPORTIONAL CONTROL OF THE AUXILIARY CIRCUIT

Standard equipment of the ViO27-6 includes an auxiliary hydraulic circuit which is operated via a proportional control, located on the joystick, which adapts the quantity and the direction of the oil flow. Additionally the circuit has an optional easy-to-operate potentiometer which adjusts the oil flow to the optimal requirement for each and every attachment.

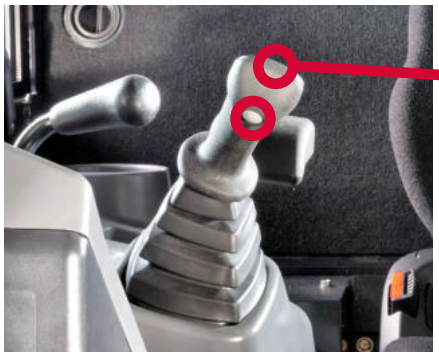

1 P.T.O hold button potentiometer

2 Proportional PTO control lever

3 Fine PTO adjustment

MAINTENANCE

EASY ACCESS

Daily maintenance has to be performed easily. There is one easy-to-open engine bonnet and the right-hand side cover is mounted on one hinge for smoother use. This gives an access to all major elements: air filter, radiator, refueling pump, battery, fuel tank, hydraulic oil tank alternator, charging, engine oil dipstick, water separator, coolant level, etc... A flat floor mat makes cleaning easier.

SAFETY

The structure of the ViO27-6 cabin has been designed to meet the ROPS (Roll-Over Protective Structure) certification as well as the FOPS (Falling Object Protective Structure) level 1.

YANMAR FULL PROTECT

THE BEST BOOM AND ARM PROTECTION ON THE MARKET

The ViO27-6 benefits from a unique and complete protection of all its boom, arm and bucket cylinders. All cylinder tubes and rods are protected by a spring type steel plate, which reduces & drastically the Total Cost of Ownership of the machine.

LED LIGHTING: EFFICIENCY AND LOW CONSUMPTION

In order to work safely, efficiently and with accuracy in the darkness, the ViO27-6 is equipped in standard with 1 LED light positioned in the inner part of the boom.

DIGITAL INTERFACE

The ViO27-6 is equipped with a digital interface which informs the operator in real time about the status of his machine. Perfectly integrated into the right hand console, the 3.3" screen provides excellent visibility. The interface provides the customer with useful information through LED lamps, or indications about important elements like fuel consumption, fuel gauge, coolant temperature gauge, etc... The interface assists the customer for maintenance intervals and related intervention planning. It also works as a diagnostic tool, in case of malfunction, by sending an error code and an information icon on the display.

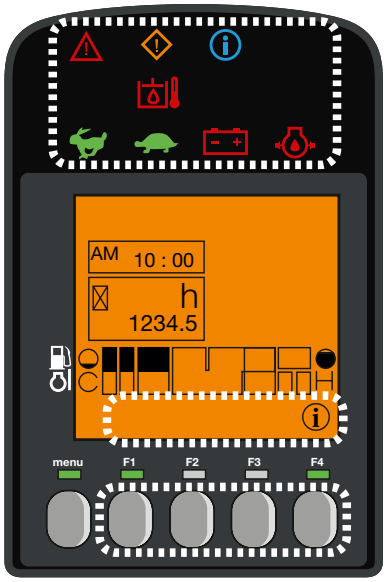

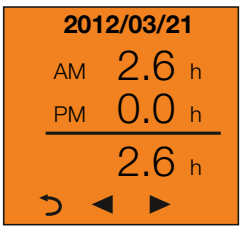

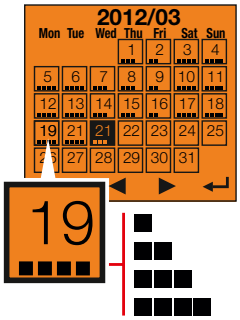

EQUIPMENT

[STANDARD EQUIPMENT]

PERFORMANCE

3TNV76-NBVA1 Yanmar diesel | Direct Injection | Auto-deceleration system | VIPPS Hydraulic system (ViO Progressive 3 Pump System) | Proportional 3rd hydraulic circuit line to arm end | 1 LED light integrated into the boom.

COMFORT AND EASE OF USE

LCD interface | Ergonomic suspension seat with adjusting levers | Arm rests | Foot rests | Foldable travelling pedals | Switch on blade lever for travelling speed change | Windshield with 2 fully retractable parts | Sliding double right side window | Transparent upper front part | Wiper | Windshield washer | Automatic cabin light | 1 x 12V outlet | Storage boxes | Smartphone holder & USB charging port.

SAFETY AND DURABILITY

Handrails | Safety lever | Seat belt | Evacuation hammer | Anchor points | 3 mirrors | Horn | Blade cylinder supply hose into two parts | Complete protection of the cylinders (bucket, boom, arm and blade) | Hoses protected by abrasion resistant sleeves | Lockable covers.

MISCELLANEOUS

Fuel gauge | Toolbox | Toolkit | Grease pump | Lighter standard counterweight for ViO27-6 : 305 kgs | Lighter standard counterweight for ViO27LW.-6 : 200 kgs.

EQUIPMENT

[OPTIONAL EQUIPMENT]

PERFORMANCE

Steel crawlers | Long arm (+250 mm) | Clamshell bucket circuit | Quick couplers | 2 front LED working lights (cabin and canopy) | 1 rear LED working light (cabin and canopy) | 1 LED flashing rotary fixed (cabin and canopy) | 1 rear LED work light + 1 LED flashing rotary fixed | Beacon light with magnetic base | Additional counterweight (+90 kg) | 3rd hydraulic circuit to arm end with adjustable proportional control by potentiometer | 4th hydraulic circuit to arm end with adjustable proportional control by potentiometer (Max pressure - 210 bar / Max flow - 32 l/min) | quick hitch line (150 - 165 bar (+-3).

COMFORT AND EASE OF USE

PVC suspension seat with adjustment levers | Seat Cover | Blue tooth radio | Central greasing.

SECURITY AND DURABILITY

Safety valves for lifting + overload warning | Travel alarm | Removable battery cut-off switch | SmartAssist Remote.

MISCELLANEOUS

Biodegradable oil | Documentation box.

[ATTACHMENTS]

Yanmar gives you the attachment that fits your needs and matches the safety standards applicable in your country: mechanical quick coupler, hydraulic quick coupler, ditch cleaning bucket, tilting bucket, digging bucket, hydraulic breaker...

DIMENSIONS

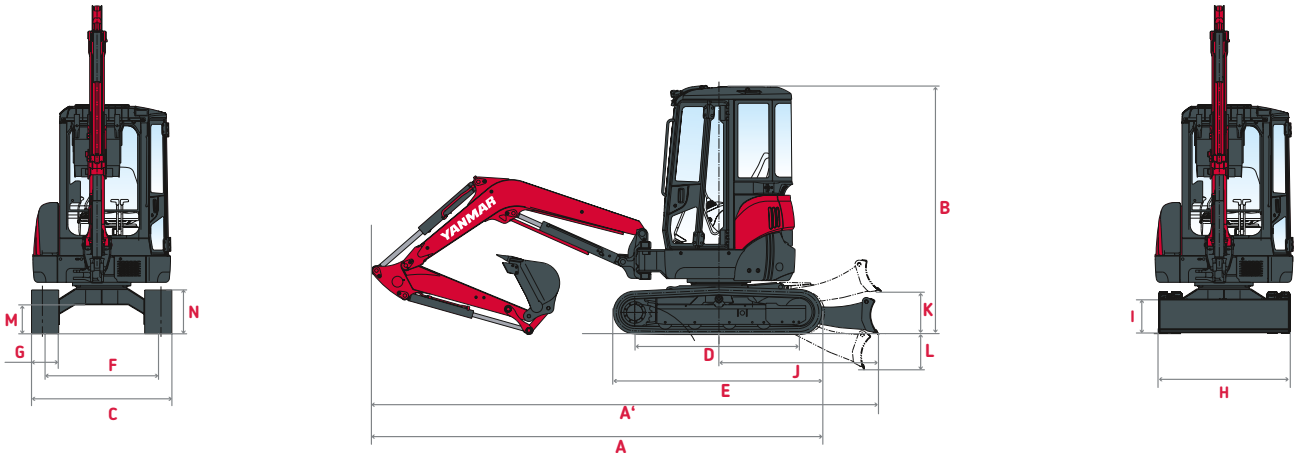

A	Overall length	4110 / 4120 * mm	H	Overall blade width	1500 mm
A'	Overall length with blade at the back	4490 / 4500 * mm	I	Overall blade height	290 mm
B	Overall height	2530 mm	J	Blade distance	1380 mm
C	Overall width	1500 mm	K	Max. blade height above the ground	340 mm
D	Length of track on ground	1590 mm	L	Max. blade depth	355 mm
E	Undercarriage length	2040 mm	M	Minimum ground clearance	320 mm
F	Lane	1250 mm	N	Ground clearance under counterweight	-
G	Track width	250 mm			

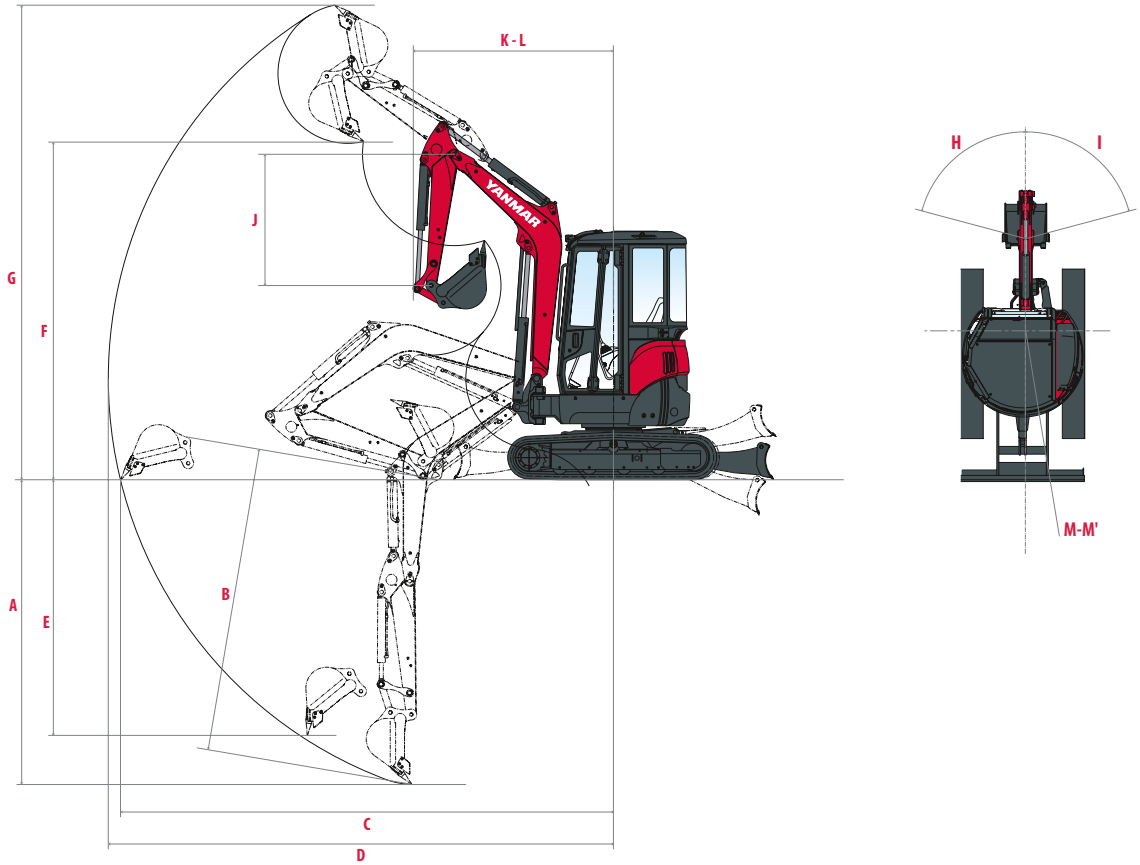

A	Max. digging depth - Blade lifted	2490 / 2740* mm	H	Boom swinging base to left	47°
B	Max. digging depth - Blade lowered	2690 / 2940* mm	I	Boom swinging base to right	74°
C	Max. digging reach on ground	4340 / 4590* mm	J	Arm lenght	1150 / 1400* mm
D	Max. digging reach	4460 / 4700* mm	K	Front turning radius	1950 / 1990* mm
E	Max. vertical wall	1150 / 1290* mm	L	Front turning radius with boom swing	1650 / 1680* mm
F	Max. dumping height	2830 / 2990* mm	M	Rear turning radius	750 mm
G	Max. cutting height	3990 / 4140* mm	M'	Rear boom swing with additionnal counterweight	825 mm

* with long arm

LIFTING CAPACITY (ViO27-6)

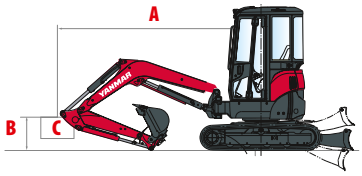

Tipping load, rating over front

Tipping load, rating over side 90°

Long arm, additional counterweight

		Canopy								Cabin							
		Blade on ground/Blade above ground								Blade on ground/Blade above ground							
A		Max		3 m		2,5 m		2 m		Max		3 m		2,5 m		2 m	
B	(A=)																
3 m	3 020	430/420	450*/450*	-	-	-	-	-	-	440/430	450*/450*	-	-	-	-	-	-
2,5 m	3 380	375/365	460*/440	435/460*	460*/460*	-	-	-	-	385/375	460*/450	455/460*	460*/460*	-	-	-	-
2 m	3 620	345/335	470*/400	405/405	460*/460*	-	-	-	-	355/345	470*/410	425/425	460*/460*	-	-	-	-
1 m	3 810	305/305	490*/355	335/475	600*/600*	760*/760*	760*/760*	-	-	315/315	490*/365	355/475	600*/600*	760*/760*	760*/760*	-	-
0 m	3 650	345/305	520*/370	445/445	730*/530	565/565	950*/690	800/770	1 310*/980	355/315	520*/380	465/465	730*/540	595/595	950*/720	800/810	1 310*/985
-1 m	3 120	375/365	540*/440	435/425	700*/520	555/555	920*/660	780/780	1 200*/930	385/375	540*/450	455/445	700*/540	585/585	920*/690	820/820	1 200*/980
-1,5 m	2 610	460/450	530*/525	-	-	565/565	760*/670	760/760	960*/930	470/460	530*/535	-	-	595/595	760*/700	800/800	960*/960

Long arm

		Canopy								Cabin							
		Blade on ground/Blade above ground								Blade on ground/Blade above ground							
A		Max		3 m		2,5 m		2 m		Max.		3 m		2,5 m		2 m	
B	(A=)																
3 m	3 020	390/380	450*/450*	-	-	-	-	-	-	400/390	450*/450*	-	-	-	-	-	-
2,5 m	3 380	340/330	460*/400	390/460*	460*/460*	-	-	-	-	350/340	460*/410	410/460*	460*/460*	-	-	-	-
2 m	3 620	310/300	470*/360	360/360	460*/460*	-	-	-	-	320/310	470*/370	380/380	460*/460*	-	-	-	-
1 m	3 810	270/270	490*/320	290/440	600*/600*	760*/760*	760*/760*	-	-	280/280	490*/330	310/460	600*/600*	760*/760*	760*/760*	-	-
0 m	3 650	310/270	520*/330	400/400	730*/480	510/510	950*/630	720/690	1 310*/890	320/280	520*/340	420/420	730*/500	540/540	950*/660	760/730	1 310*/930
-1 m	3 120	330/320	540*/390	390/380	700*/470	500/500	920*/600	700/700	1 200*/870	340/330	540*/400	410/400	700*/490	530/530	920*/630	740/740	1 200*/910
-1,5 m	2 610	410/400	530*/470	-	-	510/510	760*/610	680/680	960*/840	420/410	530*/480	-	-	540/540	760*/640	720/720	960*/870

Standard arm, additional counterweight

		Canopy								Cabin							
		Blade on ground/Blade above ground								Blade on ground/Blade above ground							
A		Max		3 m		2,5 m		2 m		Max		3 m		2,5 m		2 m	
B	(A=)																
3 m	3 020	525*/525	525*/525*	525*/525*	525*/525*	-	-	-	-	525*/525*	525*/525*	525*/525*	525*/525*	-	-	-	-
2,5 m	3 380	425/425	520*/520*	495*/495*	495*/495*	-	-	-	-	435/420	520*/520*	495*/495*	495*/495*	-	-	-	-
2 m	3 620	375/375	520*/440	525*/525*	525*/525*	550*/550*	550*/550*	-	-	385/385	520*/450	525*/525*	525*/525*	550*/550*	550*/550*	-	-
1 m	3 810	335/335	550*/385	485/475	670*/570	630/625	850*/760	870/870	1 220*/1 090	345/345	550*/395	505/495	670*/590	660/655	850*/790	880/880	1 220*/1 130
0 m	3 650	345/335	570*/400	455/445	760*/530	560/565	970*/680	790/790	1 320*/960	355/345	570*/410	475/465	760*/550	590/595	970*/710	800/790	1 320*/1 000
-1 m	3 120	415/415	600*/490	445/435	660*/520	555/555	860*/670	770/770	1 150*/930	425/425	600*/500	465/455	660*/540	585/585	860*/700	810/810	1 150*/970
-1,5 m	2 610	540/540	580*/635	-	-	575/565	650*/650*	780/780	880*/880*	550/550	580*/635	-	-	605/595	650*/650*	820/820	880*/890*

Standard arm

		Canopy								Cabin							
		Blade on ground/Blade above ground								Blade on ground/Blade above ground							
A		Max		3 m		2,5 m		2 m		Max		3 m		2,5 m		2 m	
B	(A=)																
3 m	3 020	525*/525*	525*/525*	525*/525*	525*/525*	-	-	-	-	525*/525*	525*/525*	525*/525*	525*/525*	-	-	-	-
2,5 m	3 380	390/390	520*/520*	495*/495*	495*/495*	-	-	-	-	400/400	520*/520*	495*/495*	495*/495*	-	-	-	-
2 m	3 620	340/340	520*/400	525*/525*	525*/525*	550*/550*	550*/550*	-	-	350/350	520*/410	525*/525*	525*/525*	550*/550*	550*/550*	-	-
1 m	3 810	300/300	550*/350	440/430	670*/520	570/570	850*/700	790/790	1 220*/1000	310/310	550*/360	460/450	670*/540	600/600	850*/730	830/830	1 220*/1040
0 m	3 650	310/300	570*/360	410/400	760*/480	495/510	970*/620	710/710	1 320*/870	320/310	570*/370	430/420	760*/500	525/540	970*/650	750/750	1 320*/910
-1 m	3 120	370/370	600*/400	400/390	660*/470	500/500	860*/610	690/690	1 150*/840	380/380	600*/450	420/410	660*/490	530/530	860*/640	730/730	1 150*/880
-1,5 m	2 610	490/490	580*/580	-	-	520/510	650*/650*	700/700	880*/880*	500/500	580*/580	-	-	550/540	650*/650*	740/740	880*/880*

[The data in this table represents the lifting capacity in accordance with IOS 10567. They do not include the weight of the bucket and correspond to 75% of the maximum static tipping load of the 87% of the hydraulic lifting capacity. Data marked with * are the hydraulic limits of the lifting force.]

LIFTING CAPACITY (ViO27LW-6)

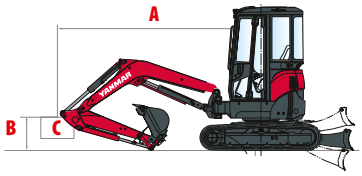

Tipping load, rating over front

Tipping load, rating over side 90°

Long arm, additional counterweight

		Canopy								Cabin							
		Blade on ground/Blade above ground								Blade on ground/Blade above ground							
A		Max		3 m		2,5 m		2 m		Max		3 m		2,5 m		2 m	
B	(A=)																
3 m	-	430 / 420	*445 / 440	-	-	-	-	-	-	440 / 440	*445 / 440	-	-	-	-	-	-
2,5 m	-	370 / 345	*445 / 430	435 / 460	*460 / 460	-	-	-	-	380 / 355	*445 / 440	455 / 460	*460 / 460	-	-	-	-
2 m	-	325 /310	*460 / 385	390 / 385	*450 / 450	-	-	-	-	335 / 320	*460 / 395	410 / 405	*450 / 450	-	-	-	-
1 m	-	285 / 280	*465 / 350	295 / 425	*555 / 525	*700 / 675	*670 / 665	-	-	295 / 290	*465 / 360	315 / 425	*555 / 525	*700 / 675	*670 / 665	-	-
0 m	-	320 / 290	*510 / 380	390 / 395	*675 / 530	530 / 610	*905 / 660	695 / 665	*1 240 / 970	330 / 300	*510 / 390	405 / 415	*675 / 550	560 / 535	*905 / 690	695 / 700	*1 240 / 975
-1 m	-	365 / 350	*520 / 465	380 / 390	*675 / 510	505 / 510	*865 / 625	705 / 695	*1 185 / 845	375 / 360	*520 / 475	395 / 400	*675 / 540	535 / 535	*865 / 655	740 / 730	*1 185 / 890
-1,5 m	-	395 / 385	*495 / 405	-	-	515 / 515	*865 / 515	730 / 695	*880 / 860	400 / 395	*495 / 415	-	-	545 / 545	*865 / 665	770 / 730	*880 / 890

Long arm

		Canopy								Cabin							
		Blade on ground/Blade above ground								Blade on ground/Blade above ground							
A		Max		3 m		2,5 m		2 m		Max		3 m		2,5 m		2 m	
B	(A=)																
3 m	-	390 / 380	*445 / 440	-	-	-	-	-	-	400 / 390	*445 / 440	-	-	-	-	-	-
2,5 m	-	335 / 310	*445 / 380	390 / 460	*460 / 460	-	-	-	-	345 / 320	*445 / 390	410 / 460	*460 / 460	-	-	-	-
2 m	-	290 / 275	*460 / 345	345 / 340	*450 / 450	-	-	-	-	300 / 285	*460 / 355	365 / 360	*450 / 450	-	-	-	-
1 m	-	250 / 245	*465 / 315	255 / 390	*555 / 525	*700 / 675	*670 / 665	-	-	260 / 255	*465 / 325	270 / 410	*555 / 525	*700 / 675	*670 / 665	-	-
0 m	-	285 / 255	*510 / 340	345 / 350	*675 / 480	475 / 475	*905 / 600	620 / 585	*1 240 / 880	295 / 265	*510 / 350	360 / 370	*675 / 500	505 / 480	*905 / 630	655 / 620	*1 240 / 920
-1 m	-	320 / 305	*520 / 415	335 / 335	*675 / 470	455 / 455	*865 / 565	625 / 615	*1 185 / 785	330 / 315	*520 / 425	360 / 350	*650 / 490	480 / 480	*865 / 595	660 / 650	*1 185 / 820
-1,5 m	-	340 / 335	*495 / 355	-	-	460 / 460	*865 / 575	650 / 615	*880 / 770	350 / 345	*495 / 360	-	-	480 / 490	*715 / 605	690 / 650	*880 / 800

Standard arm, additional counterweight

		Canopy								Cabin							
		Blade on ground/Blade above ground								Blade on ground/Blade above ground							
A		Max		3 m		2,5 m		2 m		Max		3 m		2,5 m		2 m	
B	(A=)																
3 m	-	*525 / 525	*520 / 515	-	-	-	-	-	-	*525 / 525	*520 / 515	-	-	-	-	-	-
2,5 m	-	420 / 405	*505 / 500	*495 / 495	*495 / 495	-	-	-	-	430 / 400	*505 / 500	*495 / 495	*495 / 495	-	-	-	-
2 m	-	355 / 350	*510 / 425	*505 / 500	*515 / 515	*520 / 520	*540 / 530	-	-	365 / 360	*510 / 435	*505 / 500	*515 / 515	*520 / 520	*540 / 530	-	-
1 m	-	315 / 310	*525 / 380	445 / 425	*625 / 505	580 / 560	*760 / 685	795 / 790	*1 010 / 910	325 / 320	*525 / 390	465 / 445	*625 / 525	610 / 585	*760 / 710	805 / 800	*1 010 / 945
0 m	-	320 / 320	*560 / 410	400 / 395	*705 / 530	525 / 510	*925 / 650	685 / 680	*1 250 / 950	330 / 330	*560 / 420	415 / 415	*705 / 550	555 / 535	*925 / 680	695 / 680	*1 250 / 990
-1 m	-	405 / 400	*580 / 515	-	-	510 / 510	*805 / 635	695 / 685	*1 135 / 845	415 / 410	*580 / 525	-	-	535 / 535	*805 / 665	730 / 720	*1 135 / 880
-1,5 m	-	470 / 475	*545 / 515	-	-	-	-	750 / 715	*800 / 800	480 / 485	*545 / 515	-	-	-	-	790 / 750	*800 / 810
														535 / 535			

Standard arm

		Canopy								Cabin							
		Blade on ground/Blade above ground								Blade on ground/Blade above ground							
A		Max		3 m		2,5 m		2 m		Max		3 m		2,5 m		2 m	
B	(A=)																
3 m	-	*525 / 530	*515 / 515	-	-	-	-	-	-	*530 / 525	*520 / 515	-	-	-	-	-	-
2,5 m	-	385 / 370	*505 / 500	*500 / 500	*490 / 490	-	-	-	-	395 / 380	*505 / 500	*500 / 500	*495 / 495	-	-	-	-
2 m	-	320 / 315	*510 / 385	*500 / 505	*510 / 510	*510 / 520	*540 / 530	-	-	330 / 325	*510 / 395	*505 / 500	*515 / 515	*535/535	*540 / 530	-	-
1 m	-	280 / 275	*525 / 345	400 / 380	*625 / 455	470 / 505	*760 / 625	720 / 715	*1010 / 820	290 / 285	*525 / 395	420 / 400	*625 / 475	550 / 530	*760 / 650	755 / 750	*1 010 / 855
0 m	-	285 / 285	*560 / 370	355 / 350	*705 / 480	400 / 455	*925 / 590	610 / 605	*1 250 / 860	295 / 295	*560 / 380	370 / 370	*705 / 500	490 / 480	*925 / 660	645 / 640	*1 250 / 900
-1 m	-	360 / 355	*580 / 465	-	-	455 / 455	*805 / 575	615 / 605	*1 135 / 755	370 / 365	*580 / 475	-	-	480 / 480	*805 / 605	650 / 640	*1 135 / 940
-1,5 m	-	*500 / 500	*545 / 530	-	-	-	-	670 / 635	*800 / 790	*500 / 505	*545 / 530	-	-	-	-	710 / 670	*800 / 800

[The data in this table represents the lifting capacity in accordance with IOS 10567. They do not include the weight of the bucket and correspond to 75% of the maximum static tipping load of the 87% of the hydraulic lifting capacity. Data marked with * are the hydraulic limits of the lifting force.]

SPECIFICATIONS

[WEIGHT +/- 2% (EN STANDARDS)]

	Weight		Ground Pressure
	ViO27-6	ViO27LW-6	
Operating Weight (Canopy / Cabin)	2 665 / 2 770 kg	2 560 / 2 665 kg	30 / 31 kg/cm²
Transport Weight (Canopy / Cabin)	2 590 / 2 695 kg	2 485 / 2 590 kg	29 / 30 kg/cm²
With steel tracks	+110 kg		-
With additional counterweight	+90 kg		-

[ENGINE]

Type	3TNV76-NBVA1
Fuel	Diesel
Net Power	15.2 kW / 20.7 HP at 2500 rpm
Gross Power	15.8 kW / 21.5 HP at 2500 rpm
Displacement	1.115 l
Maximum torque	63.4-69,1 at 1800 rpm (±100)
Cooling	Water-cooling
Starter	12 V - 1.4 kW
Battery	12 V – 45 Ah
Alternator	12 V – 40 A

[HYDRAULIC SYSTEM]

Maximum pressure	210 bars
1 double piston pump with variable flow	2 x 30 l.min^{-1}
1 gear pump	21,3 l.min^{-1}
1 gear pump for pilot line	11,3 l.min^{-1}

PTO	Theoretical data	
	Pressure	Flow
2 ways	0 - 210 bar	54,2 – 1,3 l.min^{-1}
1 way	0 - 210 bar	54,2 – 1,3 l.min^{-1}

Oil flow decreases as the pressure increases

[PERFORMANCE]

Travel speed	2,8 / 4,5 km/h
Rotation speed	10 rpm
Digging force (arm)	14.4 / 12.7 kN (with long arm)
Digging force (bucket)	23,1 kN
Gradability	25°
Noise Level (2000/14/CE&2005/88/CE)	LWAG: 93 dBA; LPAG: 83 dBA

[UNDERCARRIAGE]

Number of top rollers	1
Number of bottom rollers	3
Track tensioning system	Grease cylinder

[CAPACITIES]

Fuel tank	30,5 l
Coolant: Incl.Sub-tank Capacity (0.4)	3,8 l
Engine oil	3,4 l
Hydraulic circuit	14 l
Hydraulic tank	25 l

MAINTENANCE FREQUENCY

[Change engine oil and filter: **50 hours (1st) / 500 hours (2nd)**] [Change fuel filter: **250 hours**] [Change hydraulic oil: **1 000 hours**]
[Change hydraulic filter: **50 hours (1st) / 500 hours (2nd)**] [Change cooling fluid: **2 000 hours**]

YANMAR

Yanmar Compact Equipment EMEA

GB_Vi027-6_0422

EN

www.yanmar.com

BUILDING
WITH YOU

Printed in France - Materials and specifications are subject to change from the manufacturer without notice - Please contact your local Yanmar Compact Equipment EMEA dealer for further information.